CZM
FOUNDATION EQUIPMENT

EK90T

EK90T

EK90T is in fact the same model of **EK90**, but in a horizontal drilling configuration.
It operates with 2 strings of augers, rods or casings.
The first one is mounted directly to the rotary.
The other one is set in the right side of the mast and is fed by the side shift of the rotary.
The operation can be performed from the cabin or through radio remote control outside the rig.
No man handling of the tools is required.
It is meant for great production and productivity for tie backs, soil nailing, anchors and any horizontal drilling application.

TECHNICAL SPECIFICATIONS

Max. torque	*34.000 lb.ft*	*Mast Slide*	*11 ft*
Max. RPM	*21 - 118*	*Extraction / Feed Force*	*44.300 lb*
Max. drilling diameter	*8 in*	*Radio Remote*	*Optional*
Max. depth	*52 ft*	*Base Excavator*	*CAT 320*
Rotary Stroke	*31 ft*	*Power*	*140 HP*

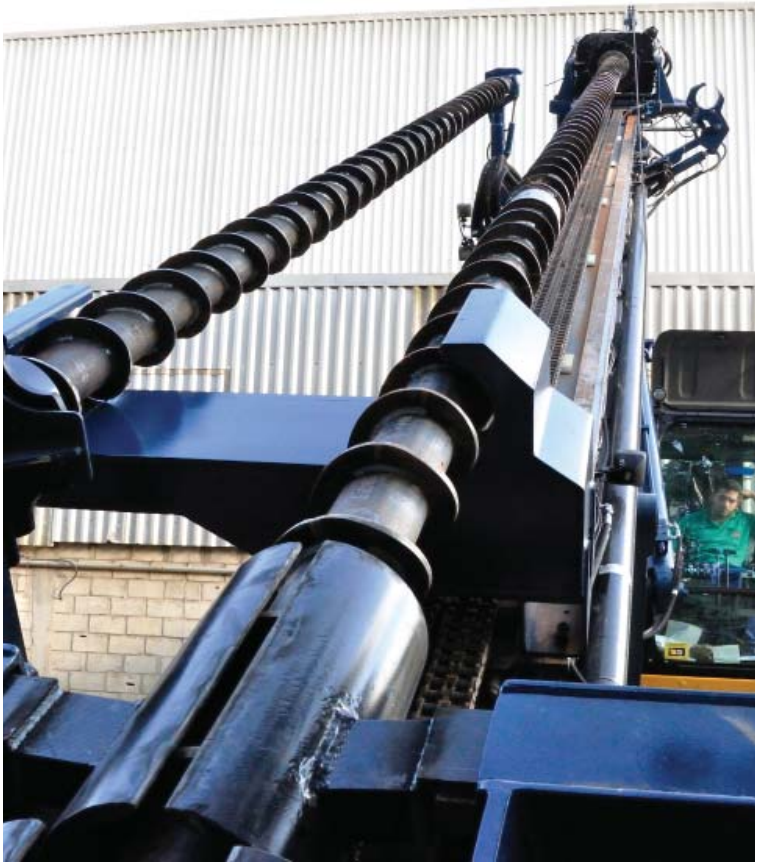

GENERAL DIMENSIONS

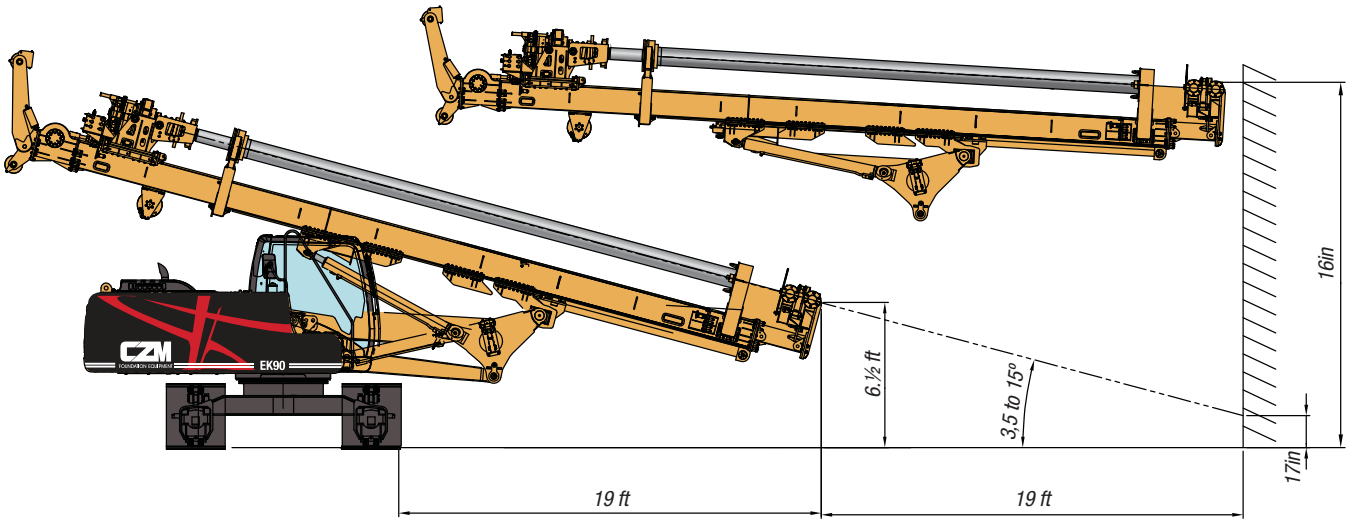

TRANSPORT POSITION

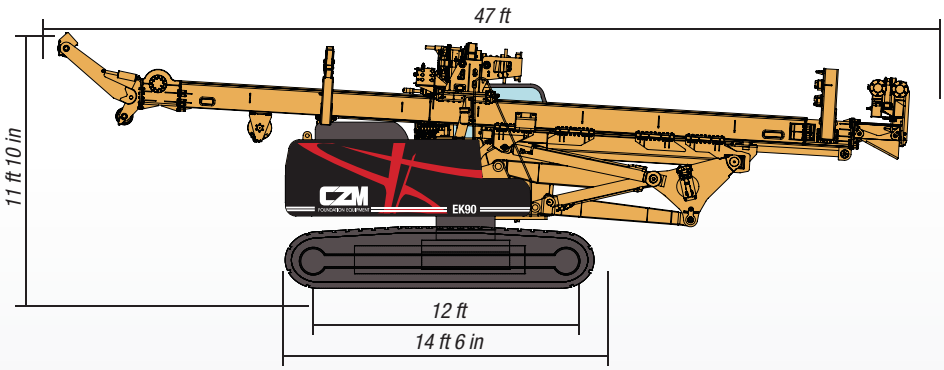

USA
SAVANNAH

WWW.CZM-US.COM
145 East Industrial Boulevard
Pembroke • Georgia • ZIP Code: 31321
United States • Phone: 1(912)200-7654

FOUNDATION EQUIPMENT

Specifications are subject to change without notice.